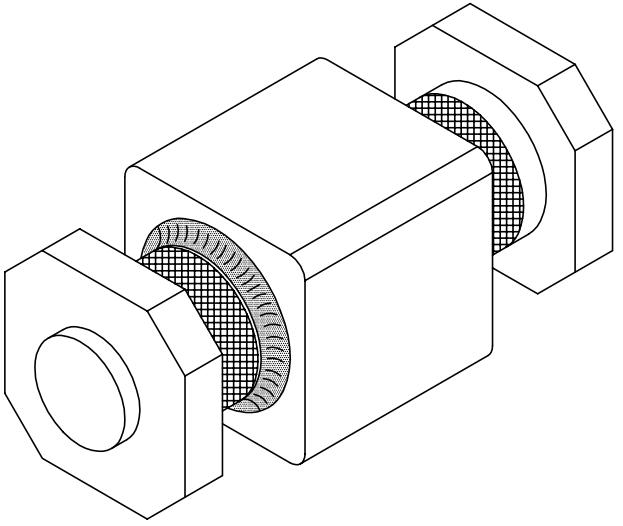

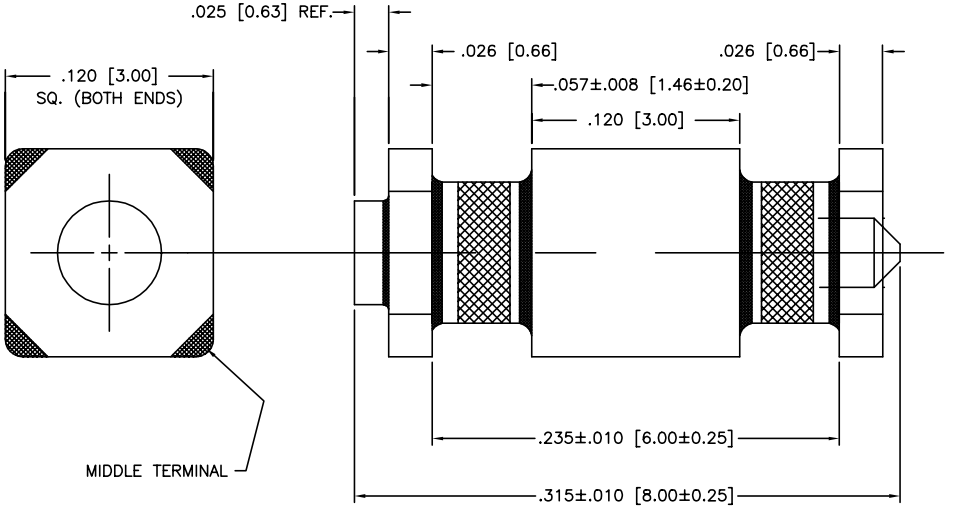

NOTES:

1) CAPACITANCE (1000hrs.): 4000pF
2) CAP TOLERANCE: +100%/−0%
3) DISSIPATION FACTOR: 4% MAX.
4) INSULATION RESISTANCE: 25°C 1GOHM
5) 200 VDC RATED @ +125°C
6) DIELECTRIC WITHSTANDING VOLTAGE: 700 VDC
7) CURRENT RATING: 10 AMPS
8) REFLOW TEMPERATURE LIMIT: +250°C
9) PACKAGING: TAPE & REEL (500 OR 2000 PCS.)

MARKING:

PART: NONE
PACKAGE: PART NO.
SCI DATE CODE
QTY.

REV. NO.	CHANGE NOTICE
03	CN 188627
02	CN 180622
01	CN 178172
00	CN 171657

UNLESS OTHERWISE SPECIFIED DIMENSIONS ARE IN INCHES.

DO NOT SCALE.

TOLERANCES UNLESS OTHERWISE SPECIFIED
Fractions ± 1/64
Dec. .xx ± .01 [0.254]
Dec. .xxx ± .005 [0.127]
Angles ±0° 30′

CODE IDENT. NO. OLSP2

SPECTRUM CONTROL INC.

ERIE, FAIRVIEW PENNSYLVANIA

Dwn. KAUFFMAN
Ckd. 2-20-96
Apvd.
Sheet 1 of 2

Description
SURFACE MOUNT FILTER

PSM1-402Z-10T

Quality Products From The Specialists In Electro-Magnetic Compatibility